Facility & Operations Field Division

Mission Statement:

To regularly inspect utility facilities and review plant operating practices to ensure regulated utility service providers deliver safe, reliable and quality service.

Complaint Investigations

The Facility & Operations Field Division also investigates complaints that require field activity and technical expertise. Complaint updates and final resolutions are provided to IAD.

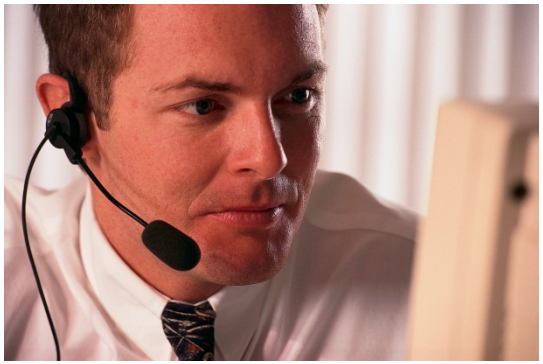

Water and Wastewater Section:

- The PUCO regulates investor-owned water and wastewater utilities, including 6 water, 4 wastewater, and 4 combined water and wastewater companies. These companies, whose total facilities comprise 41 water and 10 wastewater systems, serve more than 323,000 Ohioans
- The Section enforces Commission Orders and Chapter 4901:-1-15 of the Ohio Administrative Code (Standards for Waterworks Companies and Sewage Disposal System Companies).

Field Audits/Inspections Categories

Water/Wastewater Plant Facilities
Structure
Intakes
Low Service Pumps
Aerators
Iron Removal Filters
Flocculation Basins
Clarifiers
Filters
Chemical Feed Equipment
Clearwell
High Service Pumps
Backwash Equipment

Source of Supply
Ground water
Surface water
Administrative
Billing
Community Contacts (Mayors/Fire Chiefs)
Contingency Plan
Disconnections
Fire Contacts
NOCR
One Call Service
Outages / Interruptions
Records / Reports
Usage Restrictions

Distribution
Booster Stations
Dead Ends
Flushing Program
Flush Valves
Hydrants
Metering
Service Replacements
Storage
Valve Working
WT Chlorine, Iron, Hardness, Pressure
Collection System
Lift Stations
Manhole Inspections

The Water & Wastewater Section conducts reviews or audits for the following Ohio Administrative Code Standards:

<u>4901:1-15-10(B)(1):</u> Maintenance of plant and equipment:

1) System Specific Maintenance Plan and Schedule
2) Water: Avoid dead-ends, and provide flushing facilities that can deliver at a flow at a minimum of 2.5 feet per second where not possible.
3) Flush all mains annually and all dead-ends bi-annually
4) Establish a valve and hydrant program

Water Treatment Plant
High Service Pump

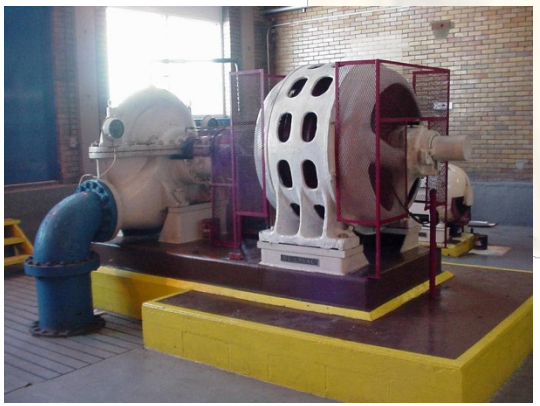

Wastewater Treatment Plant
Sludge Belt Press

- Standards:

  <u>4901:1-15-14(A)</u> **Records and reports.**

Maintain records and reports to demonstrate compliance in the following areas (among others):

- ✓Quarterly Reports
- ✓Operations
- ✓Maintenance
- ✓Customer Inquiries and Complaints
- ✓ Annual Hydrant Flushing
- ✓ Annual Valve Operations
- ✓ Maps and Records

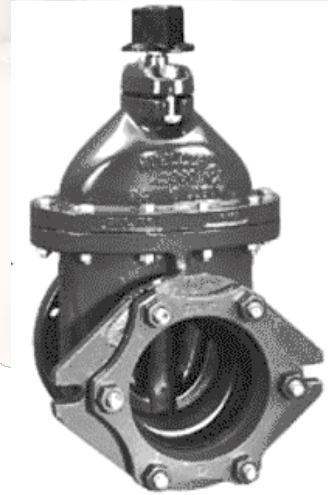

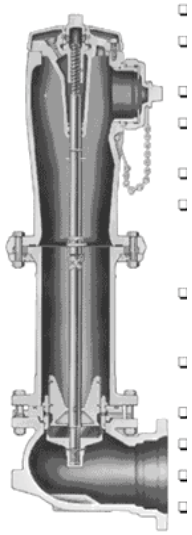

<u>4901:1-15-19</u> **Meter reading, inspecting, testing and the location of meters:**

✓Read Consumers' meter at least once each quarter
✓Inside meter reading at least once a year.
✓Maintain billing meter accuracy according to industry (AWWA) standards

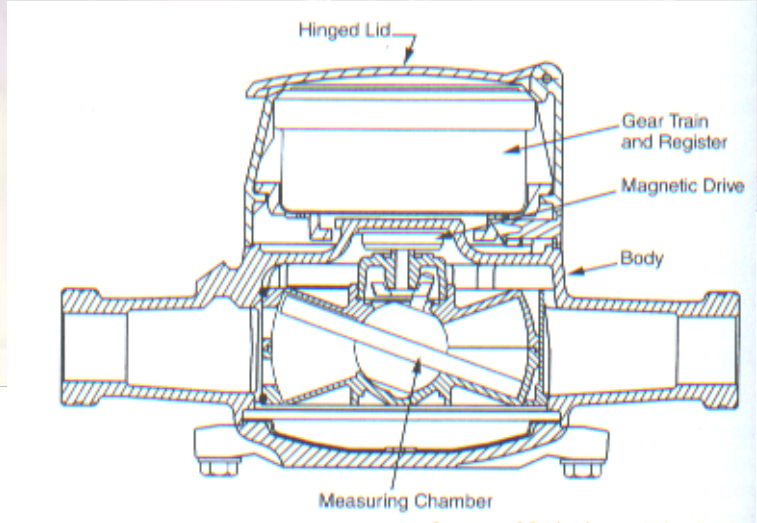

4901:1-15-20 **Quality and Adequacy of Service**

Water Systems

1. Furnish potable water that is of safe and satisfactory quality for all domestic use.
2. Provide certified operators having class of certification at least equal to that required by the Ohio Environmental Protection Agency
3. Provide each water service with a curb stop
4. Maintain pressure between 35 to 125 pounds per square inch at the curb stop.
5. Determine amount of unaccounted-for-water in each system.

Wastewater Systems

1. Avoid blockages in system
2. Minimize collection system infiltration
3. Maintain system in safe and sanitary manner

- Standards:
  4901:1-15-10(B)(6) Each waterworks company's storage tank(s) shall be inspected at least every five years.

250,000 elevated storage tank located in the water distribution system. This style tank is used for added supply and to aid in increasing pressures to the surrounding area.

2.9 million gallon Bunker Hill Reservoir (Ohio American – Ashtabula District). Finished water storage facility located away from the treatment plant in the distribution system.

Water Treatment Systems

Filter gallery in old plant of original part, Aqua Ohio – Ashtabula district, water treatment plant. Filters remove impurities from the treated finished water before it is sent into the distribution system.

These are two 0.290 MG sedimentations basins, part of the original Aqa Ohio - Ashtabula treatment process. Alum is applied prior to the basins and mixing/coagulation is accomplished by vertical paddle mixers. Sludge is then manually removed when necessary.

This photo is of the two modified Aldridge purification units and the 2, 225,000 plant clearwell storage tanks where the treated and filtered water is stored prior to being pumped into the distribution system.

Finished treated water goes into plant (clearwell) storage. High service pumps and motors like this one deliver the water from the clearwell to the water distribution system.

Aqua Ohio - Ashtabula Division main treatment plant building housing the production offices, computer SCADA equipment, and electronic controls. The chlorine and fluoride storage and feed rooms are also located here.

250,000 elevated storage tank located in the water distribution system. This style tank is used for added supply and to aid in increasing pressures to the surrounding area.

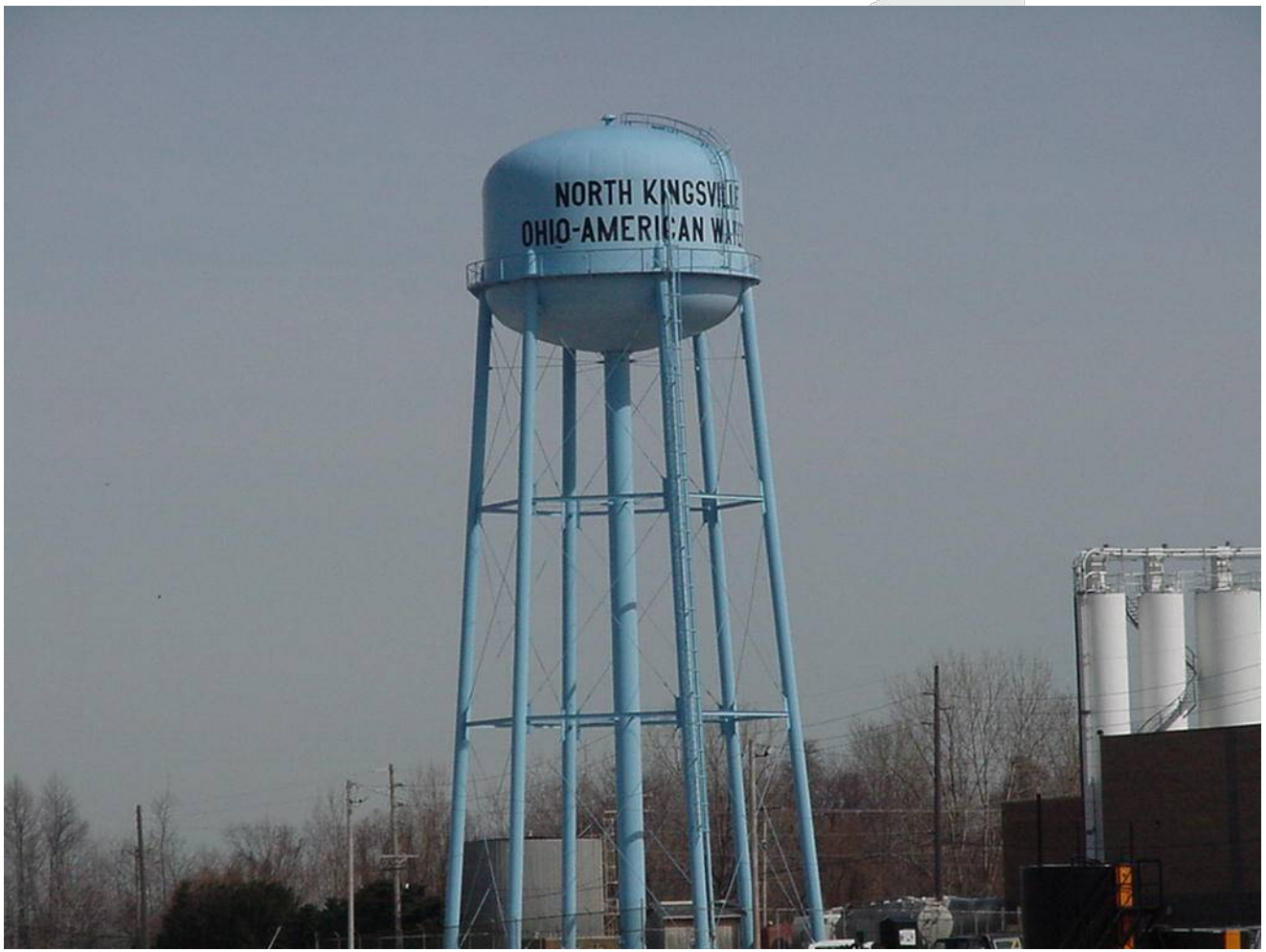

Harmon Rd Aqua Ohio - Ashtabula

Wastewater Treatment Systems

Influent Comminutor grinds solids before flows can enter the treatment process.

Roto Strainer – Used to remove large debris from the influent before it enters the aeration tanks. By removing the large debris, the various pumps and motors do not become clogged and plant equipment failures are reduced.

Hoffman brand blowers supply air to wastewater treatment plant aeration tanks.

Air from blowers is injected in Aeration tanks as a fine mist. This begins the process by allowing oxygen consuming bacteria to eat dissolved organics.

Detention time to allow solids 'in the mixed liquor' settle is provided in clarifier units. The collected sludge on the bottom of the tank is then pumped to a stabilization tank.

Liquid sludge is allowed to thicken in sludge holding tank before being pumped to the sludge drying beds.

Chlorine Contact Chamber. Chlorine is injected to the effluent to kill remaining bacteria. Chlorine is then chemically removed before the effluent is released into the receiving stream.

Wastewater treatment plant auxiliary/backup power.

Electrical control panel. All wastewater treatment controls and electrical components are linked to an alarm system and auto-dialer in case of failure when the plant is unmanned.

Sludge Press Mixing Chamber. Thickened sludge is mixed with a polymer to give it more body before the liquid is pressed between a series of belts. The remaining caked material is removed to an approved landfill.


WM

Sludge Drying Beds. Utilized to remove material that has gone though the treatment process and reduce moisture content before dried sludge is removed to an approved landfill.

Consumer Satisfaction Surveys

Survey Instructions

MOHAWK UTILITIES, INC.
Customer Survey

Customer's Address: _____

_____

_____

The **Public Utilities Commission of Ohio's** Consumer Services Department is conducting a survey to identify customer perceptions regarding the water quality and customer service provided by Mohawk Utilities, Inc. (Please keep your responses relative to the past **three** years of service)

Please complete and return the survey by February 28, 1998 making sure the survey is folded properly so that the Commission's return address is showing and sealed. No postage is necessary.

Sample Survey & Result (Standard)

Consumers - Lake Shore Division - Lake County
1048 Surveys Issued / 250 Surveys Returned / Addresses Present: 220
November 1, 2000

1. I would rate I my overall water quality as:

Excellent 1	2	3	4	Poor 5
90	106	44	7	3
36.0%	42.4%	17.6%	2.8%	1.2%

2. I would rate my water pressure as:

Excellent 1	2	3	4	Poor 5
98	94	32	14	12
39.2%	37.6%	12.8%	5.6%	4.8%

3. During normal operation (non-flushing/main break occasions, etc.), how often do you experience discolored water?

Never 1	2	3	4	Frequently 5
178	58	12	2	0
71.2%	23.2%	4.8%	0.8%	0.0%

Accomplishments

The PUCO conducts approximately 250 on-site investigations (1,300 inspection units) of water and wastewater companies each year.

To further underwrite the provision of quality service, the PUCO conducted written surveys of residential and business consumer perceptions of water quality and service, polling 2,765 consumers in 5 different systems in 2011. Information from these surveys enables the PUCO to identify and subsequently resolve consumer-identified service-related problems. Survey results are posted on the PUCO website at www.PUCO.ohio.gov.